VKP558

Extremely compact and versatile ticket printer

VKP558 is an extremely **compact and versatile ticket printer**, for **easy installation** and panel mounting. The device is equipped with black plastic bezel, a highly reliable total/partial cutter and easily inspectable paper path. VKP558 has the same panel fixing points of TG02H and the same interfaces and emulations. The product comes with a paractical drop-in cradle for paper roll and features the new **Centurion Security Suite**, a software dedicated to the gaming market to authenticate winning tickets and discard the fake ones.

CARACTERÍSTICAS

1. Design for more **secure ticket delivery**

2. Easy paper load cradle with no loose spindle

3. RGB LED and integrated cutter

4. Centurion Security Suite for authentication of tickets

5. Easy inspectable paper path

MARKETS

- Gaming machines
- Queue management systems
- Vending machines
- Self-service kiosks

ACCESORIOS

- Power supply 12V
- Kit Near Paper End sensor

CUSTOM

FICHA TÉCNICA

Printing method	Thermal, fixed head
Resolution	203 dpi (8 dots/mm)
Printing speed	70 (mm/sec)
Character set	PC437, PC850, PC858, PC860, PC862, PC863, PC864, PC865, PC866, Katakana, WPC1250, WPC1251, WPC1252, WPC1253, WPC1254, WPC1255, WPC1256, WPC1257, WPC1258, Chinese GB18030, Korean PC949
Supported Barcode	QR code, Aztec, PDF417, Data Matrix, UPCA, UPCE, EAN13, EAN8, CODE39, ITF, CODABAR, CODE93, CODE128, CODE32
Printing Format	12 cpi: Height/Width from 1 to 4, bold, reverse, underlined, italic 12/16 cpi, 16/22 cpi: Height/Width from 1 to 8, bold, reverse, underlined, italic
Printing Direction	Normal, Reverse
Paper width	57 mm
Paper weight	From 55 g/m² to 60 g/m²
Paper thickness	From 60 µm to 65 µm
Printing width	48 mm
External roll diameter	Max 70 mm
Roll core diameter	12 mm
Sensors	Paper presence, Head temperature, low paper (optional)
Emulation	CUSTOM/POS TG558
Interfaces	RS232/TTL serial port USB 2.0 port
Data Buffer	8 KB
Flash Memory	8 MB
Graphic Memory	2 Logos: 384x682 dots
Drivers	Windows® 10/11 (32/64 bit) CUPS Linux (32/64 bit) Full status monitor (Windows®/Linux)
Software Tools	Printer SET (Windows® e Android™), Windows® API, CPT support, Centurion
Special features	Centurion SW to validate ticket, anti-jam design: min. ticket 10cm
Power supply	12 Vdc ± 10%
Typical consumption	0.8 A (typical) 0.6 mA (stand-by with low power mode)
Head Life	50Km/100M pulses
Cutter	Full cut/Partial cut
Cutter life	500K cuts
Operating temperature	-10/+ 60°C
Dimensions	161.5 mm (L) x 100 mm (W) x 120 mm (H) Front: 100 mm (W) x 120 mm (H) Fixing: 83 mm (L) x 95 mm (H)
Weight	490 gr

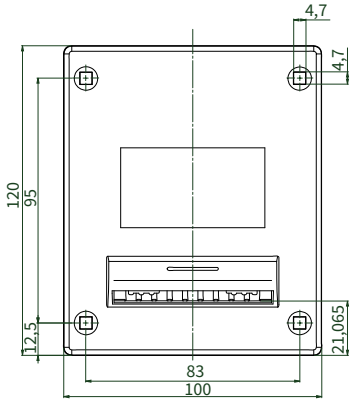

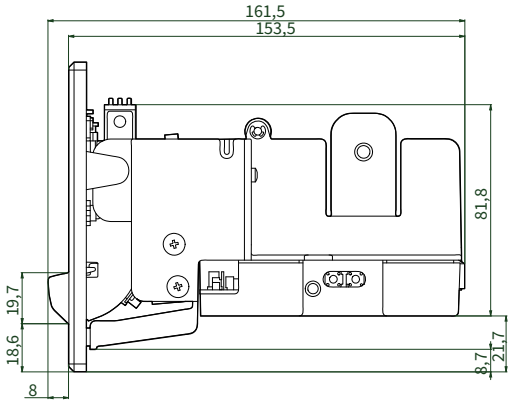

MODELOS

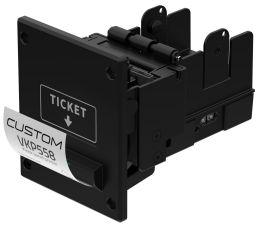

915PH010200300
PRINTER VKP558 CUTTER USB
RS232

Via I. Newton, 4 - 43010 Fontevivo PR - N° IVA: IT02498250345 - TEL.: +39 0521 680111 - FAX: - CÓDIGO ÚNICO: 7K4AJ54

Los datos técnicos de este sitio no son vinculantes y pueden modificarse sin aviso previo.
Última actualización: 28 septiembre 2026