KBR2D

Kiosk Barcode Reader

KBR2D is the family of barcode scanners designed for self-service kiosks, ATMs, price checkers, healthcare and for any OEM application, also available in a plastic case version (KBR2D-C). KBR2D is a high-performance, high-volume omnidirectional scanner, capable of quickly and accurately reading any 1D and 2D barcodes, whether printed on paper (badges, receipts, health bracelets) or displayed on the screen of a smartphone or of a tablet. KBR2D scanners are based on CMOS technology for optimal image sensitivity and dynamic range. KBR2D integration is quick and easy thanks to several mounting options.

??????????????

- **Easily integrated** with various OEM applications
- 1D and 2D barcode scanning
- **Omnidirectional scanning:** no need to align barcode and scanner, ensuring user comfort and protecting productivity
- **Long distance reading** from 3 to 28 cm without problems even in direct sunlight (100,000 lux)
- **Reading barcodes on screens** of smartphones or tablets even with brightness reduced to 25/30%
- Red colored pointer for precise aiming and optimal barcode acquisition
- **Flexibility:** various external mounting options or internal screw holes
- **Integrated decoder**
- **Custom ScannerSet** configuration software

DIMENSION:

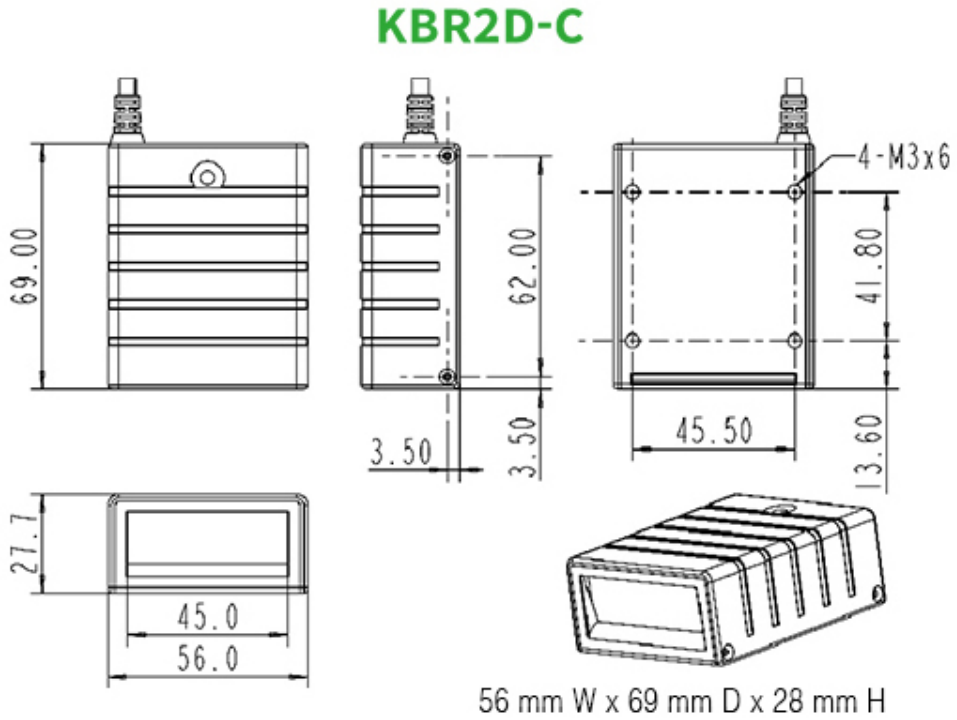

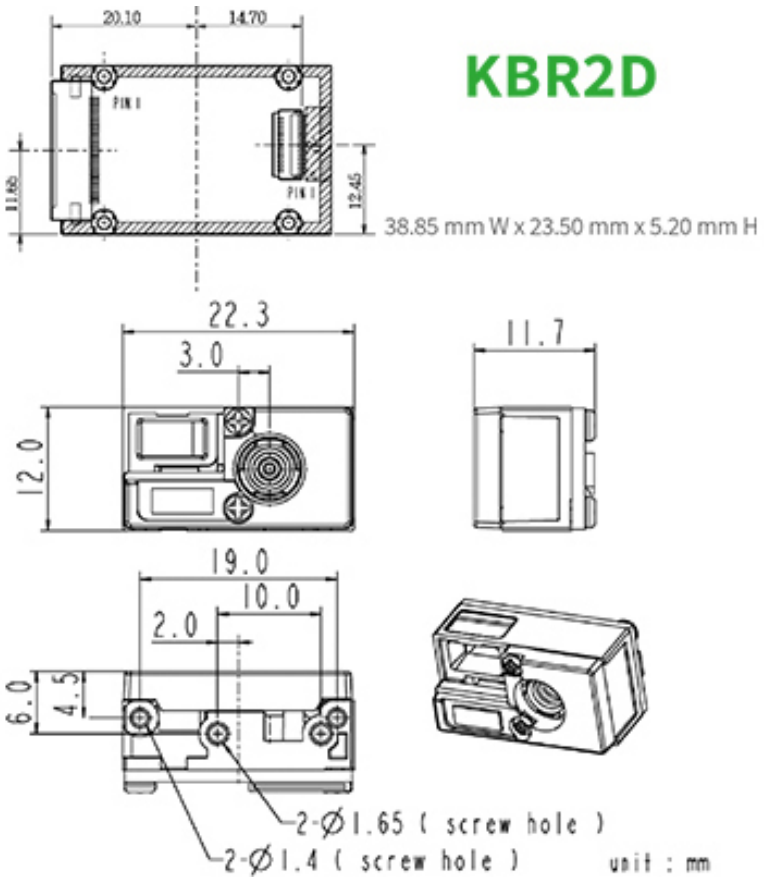
20.10
14.70
PIN 1
PIN 1
11.80
12.45
38.85 mm W x 23.50 mm x 5.20 mm H
22.3
3.0
12.0
11.7
19.0
10.0
2.0
6.0
4.5
2-Ø1.65 (screw hole)
2-Ø1.4 (screw hole)
unit : mm

KBR2D

CUSTOM

??????????? ????????

	KBR2D-C	KBR2D
GENERAL		
Interface	USB-HID(or Virtual COM port)	RS232/USB-HID(or Virtual COM port)
Barcodes Supported (1D)	UPC-A, UPC-E, EAN-8/JAN-8, EAN-13/JAN-13, Code 39, Code 128, Interleaved 25, Industrial 25, Matrix 25, Codabar/NW7, Code 93, China Post, MSI/Plessey, Telepen, GS1 Databar Omni-directional, GS1 Databar Limited, GS1 Databar Expended	
Barcodes Supported (2D)	Data Matrix, PDF 417, QR Code, Micro QR Code, Dot Code DISABLED BY DEFAULT: Aztec, Micro PDF 417, Han Xin Code, GM Code	
ELECTRICAL		
Supply Voltage	DC+5V±5%	
Current Draw		
Stand By (Typ.)	40mA ±10%	
Operation (Typ.)	380mA ±10%	
PERFORMANCE		
Light Source	White light LED	
Sensor	1280 (H) x 800 (V) pixels	
Field of View	Horizontal – 55°, Vertical – 35°	
Scan Rate	60 fps (at full resolution)	
Reading Distance	From 3 to 28 cm	
Print Contrast Ratio	PCS30%@5mil/0.127 mm	
Resolution	3mil/0.076 mm@PCS90% Code39, 8mil/0.2 mm@PCS90% QRCode	
Reading Angle	Test Conditions: Code 39, 10mil/0.25 mm, PCS90%	
Pitch Angle/Skew Tolerance	5°~60° (±5°)	
Ambient Light	Works in any lighting conditions from 0 to 100,000 lux	
Roll	360°	
Indicator	Good read beep	
ENVIRONMENTAL		
Operating Temperature	0 °C to 50 °C	
Storage Temperature	-20 °C to 70 °C	
Relative Humidity	20% to 95% (Non-condensing)	
RELIABILITY		
Life Time MTBF (calculated)	50,000 hours	
Thermal Shock		
High Temp.	60°C	
Low Temp.	-20 °C	
Cycle Time	30 minutes for high temp./30 minutes for low temp.	
Mechanical Shock	2000G, 0.7ms, half sinus, 3axes	
Vibration	8G r.m.s, from 10 to 500Hz, 2 hours per axis, 3 axes	

CUSTOM

	KBR2D-C	KBR2D
PHYSICAL		
Weight		
Reader	106 g (optical + board + case)	28 g (optical + board)
USB cable	51 g	-
Material	Polycarbonate	-
Dimension	56 mm W x 69 mm D x 28 mm H	38.85 mm W x 23.50 mm x 5.20 mm H

READING RANGE

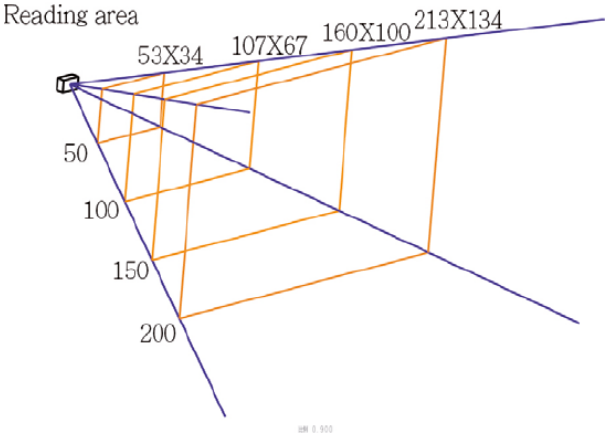

Barcode mil/Depth of Field mm	KBR2D-C		KBR2D
3mil Code39	50~90 mm	**3mil Code39**	60~100 mm
4mil Code39	45~100 mm	**4mil Code39**	55~110 mm
10mil Code39	30~220 mm	**10mil Code39**	50~220 mm
20mil Code39	30~280 mm	**20mil Code39**	50~300 mm
20mil QR Code	30~210 mm	**20mil QRCode**	50~200 mm
20mil PDF417	30~120 mm	**20mil PDF417**	50~120 mm

Note: The test is under ambient light 700 ~ 800 Lux.
The difference in depth of field between the two models depends on the fact that in the KBR2D-C model the optics are housed in a frame.

??????

9C3FH010000001
KIOSK BARCODE SCAN 1D/2D
OPEN FRAME KBR2D

9C3FH010000002
KIOSK BARCODE SCAN 1D/2D
COVERED KBR2D-C

Via I. Newton, 4 - 43010 Fontevivo PR - [redacted] IT02498250345 - [redacted] +39 0521 680111 - [redacted] - [redacted] 7K4AJ54

[redacted] 28 [redacted] 2026